JZ10-11-R10	**6 Digital Inputs, 4 Relay Outputs**
JZ10-11-R16	**6 Digital, 2 Analog/Digital, 2 Analog Inputs, 6 Relay Outputs**

Micro-OPLC Technical Specifications

Power supply

Input voltage	24VDC	
Permissible range	20.4VDC to 28.8VDC with less than 10% ripple	
Current Consumption	See Note 1	
	JZ10-11-R10	JZ10-11-R16
Max. current consumption	120mA@24VDC	136mA@24VDC
Typical power consumption	2.4W	2.6W

Notes:

1. To calculate the actual power consumption, subtract the current for each unused relay output and LCD backlight (if unused) from the maximum current consumption value.

	Per relay output	LCD backlight
Max. current per element	8.3mA@24VDC	35mA@24VDC

Digital Inputs

Number of inputs	JZ10-11-R10	JZ10-11-R16
	6 (one group) – see Note 2	8 (two groups) – see Notes 2 & 3
Input type	pnp (source) or npn (sink)	
Galvanic isolation	None	
Nominal input voltage	24VDC	
Input voltage		
pnp (source)	0-5VDC for Logic ‘0’ 17-28.8VDC for Logic ‘1’	
npn (sink)	17-28.8VDC for Logic ‘0’ 0-5VDC for Logic ‘1’	

	I0-I5	I6-I7
Input current	3.7mA@24VDC	1.2mA@24VDC
Response time	10mSec typical	20mSec typical

Input cable length	Up to 100 meters, unshielded
High speed inputs	Specifications below apply when wired as H.S.C. See Note 4.
Resolution	16-bit
Frequency	5kHz maximum
Minimum pulse width	80µs

Notes:

2. Both JZ10-11-R10 and JZ10-11-R16 comprise I0-I5; these inputs are arranged in a single group. Via wiring, the entire group may be set to either pnp or npn.
3. Only JZ10-11-R16 comprises I6 & I7. These may be wired as either digital or analog inputs, as shown in the JZ10-11-R16 Micro PLC Installation guide. I6 & I7 may be wired as npn, pnp, or 0-10V analog inputs. 1 input may be wired as pnp, while the other is wired as analog. If 1 input is wired as npn, the other may **not** be wired as analog.
4. I0 and I1 can each function as either a high-speed counter or as a normal digital input. When used as a normal digital input, normal input specifications apply.

efesotomasyon.com -Unitronics Plc

Digital Outputs

Number of outputs	JZ10-11-R10	JZ10-11-R16
	4 relay	6 relay
Output type	SPST-NO (Form A)	
Isolation	By relay	
Type of relay	Panasonic JQ1AP-24V or compatible	
Output current	5A maximum (resistive load)	
Rated voltage	250VAC / 30VDC	
Minimum load	1mA@5VDC	
Life expectancy	50k operations at maximum load	
Response time	10mS (typical)	
Contact protection	External precautions required (see Increasing Contact Life Span in the product's Installation Guide)	

Analog Inputs

JZ10-11-R16 only

Number of inputs: 4, according to wiring as described above in Note 3

	AN0 and AN1	AN2 and AN3
Input range	0-20mA, 4-20mA	0-10VDC
Input impedance	154Ω	20KΩ
Maximum input rating	30mA	28.8V

Galvanic isolation	None
Conversion method	Succesive approximation
Resolution (except 4-20mA)	10-bit (0 to 1023)
Resolution (at 4-20mA)	204 to 1023 (820 units)
Conversion time	20mSec, Synchronized to cycle time
Precision	± 3%
Status indication	Yes – if an analog input deviates above the permissible range, its value will be 1024.
Input cable length	Up to 10 meters, shielded twisted pair

Display

Type	STN LCD
Illumination backlight	LED, yellow-green, software controlled (LCD backlight; enables the display to be viewed in the dark)
Display size	2 lines, 16 characters long
Character size	5x8 matrix, 2.95x5.55mm

Keyboard

Number of keys	16 keys, including 10 user-labeled keys
Key type	Metal dome, sealed membrane switch
Slides	Slides are installed under the operating panel faceplate. They label the keys and provide a logo picture. The unit is supplied with a set of slides already installed. A blank set is available by separate order.

efesotomasyon.com -Unitronics Plc

Program	See Note 5
Ladder code memory	24K (virtual)
Execution time	46µSec for bit operations (typical)
Memory bits (coils)	256
Memory integers (registers), 16 bit	256
Timers	64
HMI displays	60 user-designed displays available
HMI variables	64 HMI variables are available to conditionally display text and data. List variables add up to 1.5K's worth of HMI capacity.

Notes:

5. The controller does **not** offer a communication port. In order to download applications, the controller must be installed with an add-on programming port module. Such a module is included in the JZ-PRG programming kit, which is available by separate purchase.

Jazz Jack

Insertion point	Enables optional add-on modules. See Note 6

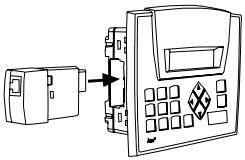

Notes:

6. Add-on modules are available by separate order.

Communication	Via add-on port module. See Note 7
GSM-support	SMS messages to/from 6 phone GSM numbers, up to 1K of user-designed messages. Supports Remote Access.
MODBUS	Supports MODBUS protocol, Master-Slave
Baud rate	According to add-on port module

Notes:

7. In order to enable communications, an add-on module containing a COM port must be plugged into the Jazz jack. The module included in the JZ-PRG programming kit may be used to communicate with external devices, if the device provides active RS232 voltage signals for purposes of power supply. For more details, see the JZ-PRG Installation Guide.

Miscellaneous

Clock (RTC)	Real-time clock functions (date and time).
Battery back-up	10 years typical at 25°C, battery back-up for RTC and system data, including variable data

Environmental

Operating temperature	0° to 50°C (32° to 122°F)
Storage temperature	-20° to 60° C (-4° to 140°F)
Relative humidity (RH)	10% to 95% (non-condensing)
Mounting method	Panel mounted (IP65/NEMA4X) DIN-rail mounted (IP20/NEMA1)

efesotomasyon.com -Unitronics Plc

Dimensions

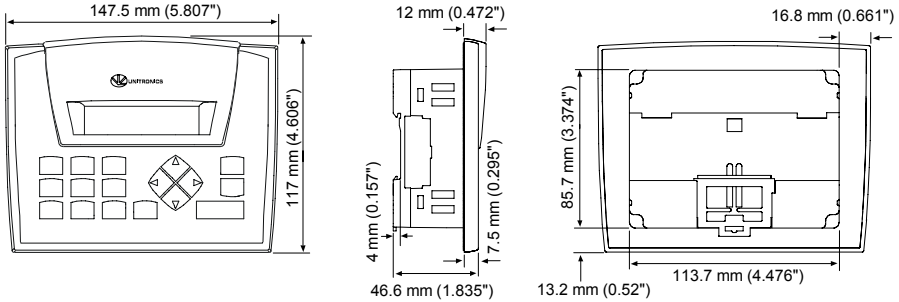

Weight	JZ10-11-R10	JZ10-11-R16
	325g (11.46 oz)	337g (11.88 oz)

Mounting

Panel mounting

Insert into cut-out:
117 x 89mm (WxH)
4.606”x 3.504”

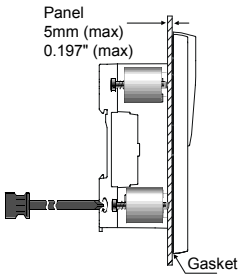

DIN-rail mounting

Snap unit onto the DIN rail

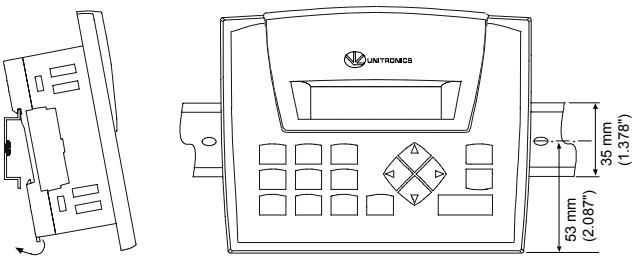

Under no circumstances will Unitronics be liable or responsible for any consequential damage that may arise as a result of installation or use of this equipment, and is not responsible for problems resulting from improper or irresponsible use of this device. No part of this document may be used for any purpose other than for the purposes specifically indicated herein nor may it be reproduced or transmitted in any form or by any means, electronic or mechanical, including photocopying and/or recording, for any purpose without written permission from Unitronics. The information appearing in this document is for general purposes only. Unitronics makes no warranty of any kind with regard to the information appearing in this document, including, but not limited to, 0implied warranties of merchantability and/or fitness for a particular use or purpose. Unitronics assumes no responsibility for the results, direct and/or indirect, of any misuse of the information appearing in this document nor for any use of the Unitronics products referred to herein in any manner deviating from the recommendations made in this document. Unitronics assumes no responsibility for the use of any parts, components, or other ancillary appliances including circuitry other than as recommended hereunder or other than that embodied in the Unitronics product. Unitronics retains all rights to its proprietary assets including, but not limited to its software products which are copyrighted and shall remain the property of Unitronics. Copyright protection claimed includes all Forms and matters of copyrightable materials and information legally allowed including but not limited to material generated from the software programs which are displayed on the screen of the Unitronics products such as styles, templates, icons, screen displays, looks, etc. Duplication and/or any unauthorized use thereof are strictly prohibited without prior written permission from Unitronics. All brand or product names are used for identification purpose only and may be trademarks or registered trademarks of their respective holders. Unitronics reserves the right to revise this publication from time to time and to amend its contents and related hardware and software at any time. Technical updates (if any) may be included in subsequent editions (if any). Unitronics product sold hereunder can be used with certain products of other manufacturers at the user’s sole responsibility.

5414-0060-4